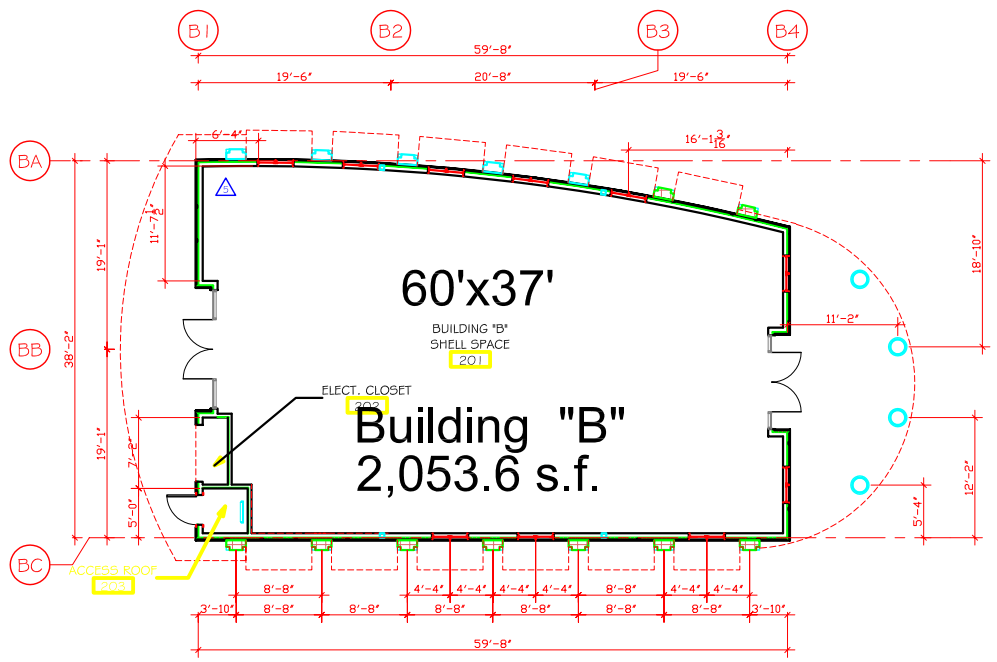

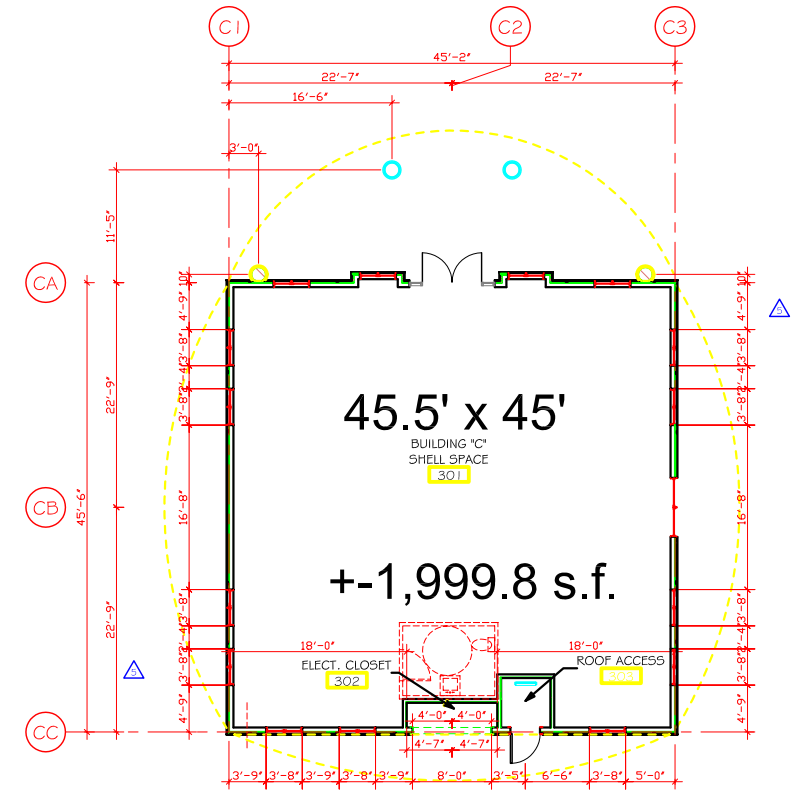

Building "B" Drive thru with +- 300 sf. covered porch approved to serve food & drink

Building "C" has +- 500 sf. outdoor covered porch

R C O

Design & Construction Inc.

LICENSE # 0066230

- **Planning**
- **Designing**
- **Building**

1812 Winners Cup
Las Vegas, NV
89117

702-219-2949

rezaralaie@aol.com

R C O